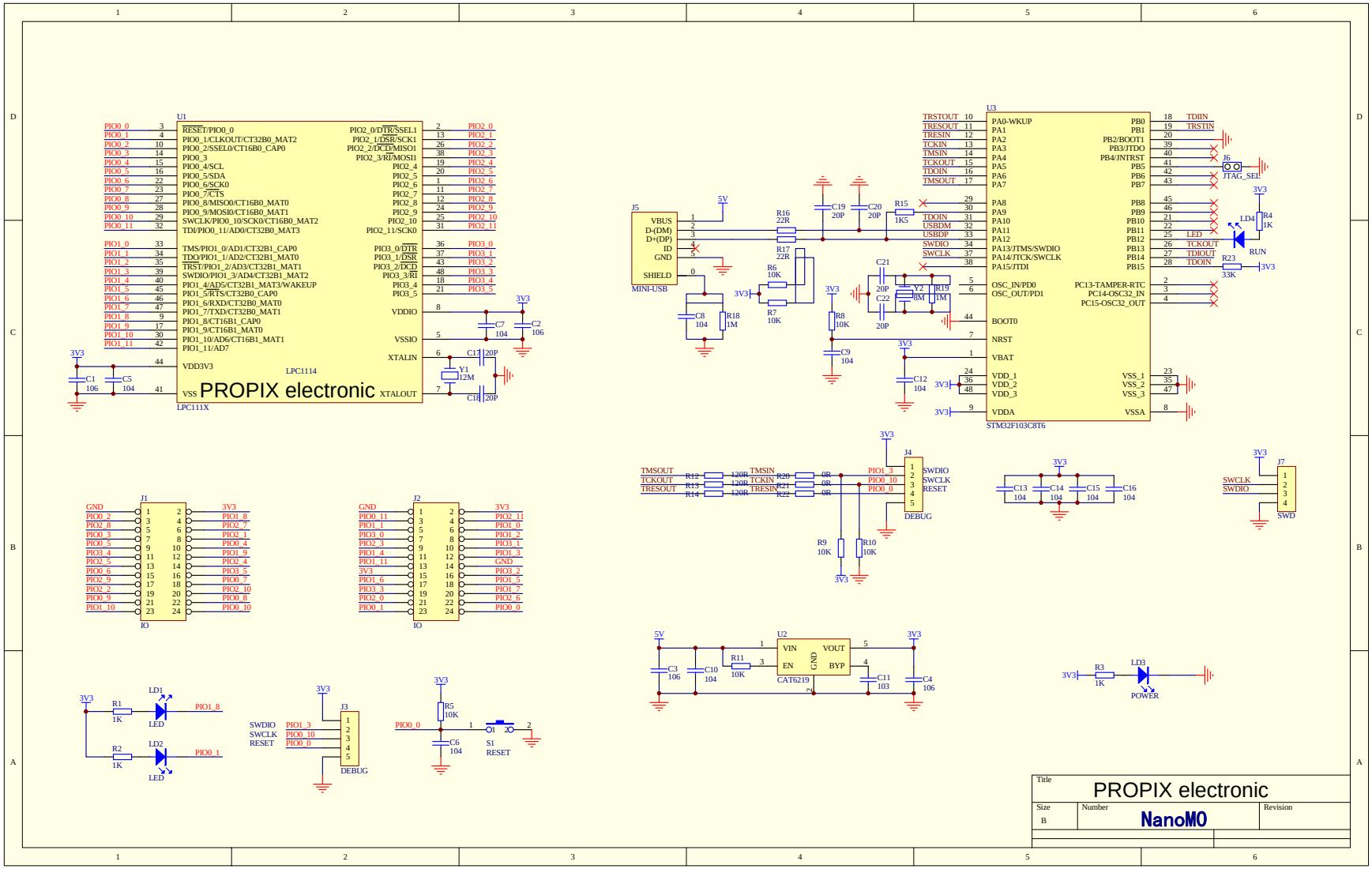

U1
LPC111X
LPC1114
PROPIX electronic
U3
STM32F103C8T6
J5
MINI-USB
J4
DEBUG
J1
IO
J2
IO
J3
DEBUG
J7
SWD
U2
CAT6219
J6
JTAG_SEL
LD4
RUN
LD1
LED
LD2
LED
LD3
POWER
S1
RESET
Title
PROPIX electronic
Size
B
Number
NanoM0
Revision